WATERMARK

BROOKLYN, NEW YORK

Brooklyn

31-7.9-BK

Deck Mounted Pot Filler

- 1/2”-14 NPS Male Connection at Bottom
- Recommended Mounting Hole: 1”
- All Lead-Free Brass Construction
- Flow Rate: 7.5 GPM
- 1/4 Turn Ceramic Cartridge
- Use With Cold Water Only
- 360° Rotating Spout
- Professional Installation Required
- Fits Deck Up To 3” Thick

Available in all finishes shown on the Watermark Designs website

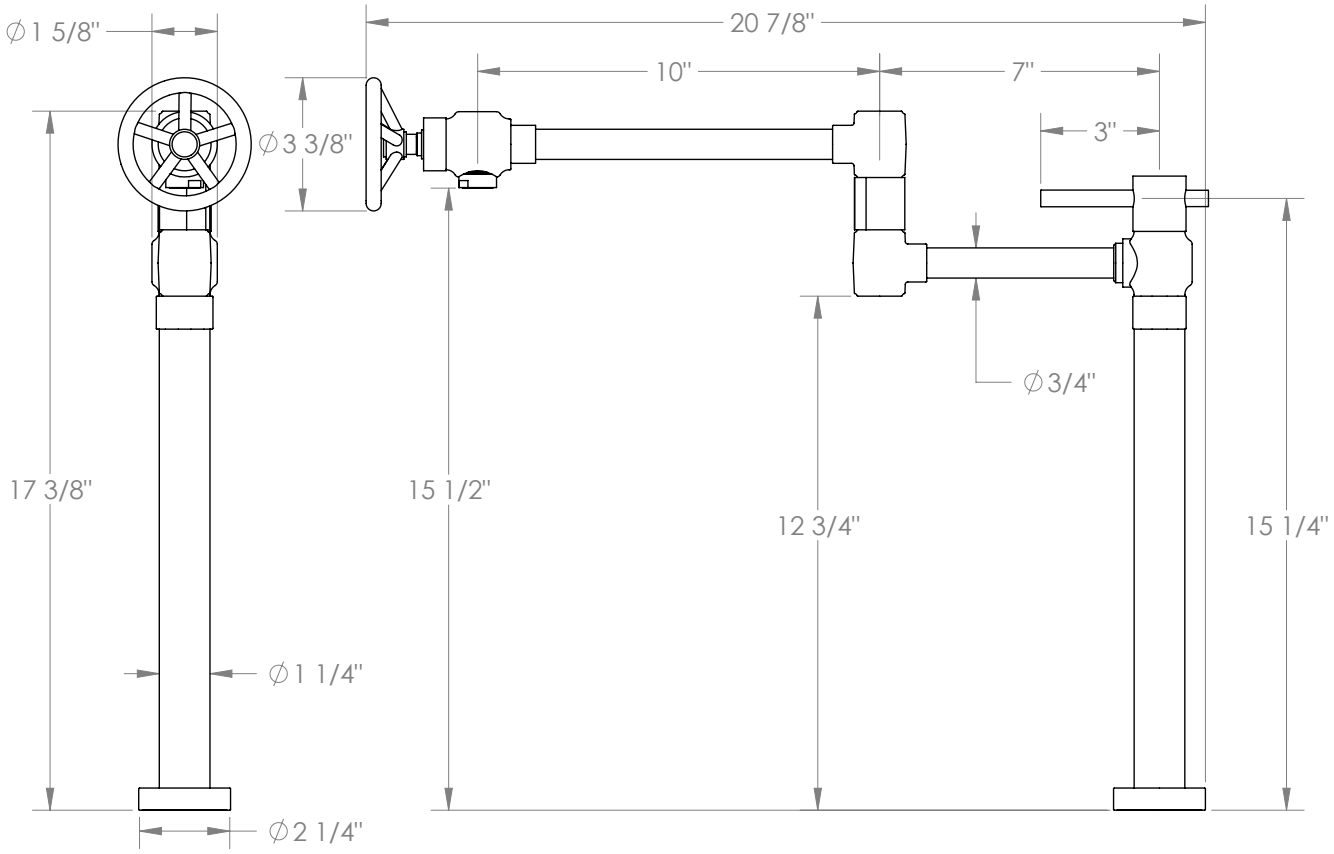

Meets the applicable requirements of ASME A112.18.1-2005/CSA B125.1-05, entitled “Plumbing Supply Fittings”.
Watermark Designs reserves the right to make revisions without notice to produce specifications. All product dimensions are nominal.

09/2023

350 Dewitt Ave. Brooklyn, NY 11207 USA | T: 1 718 257 2800 | F: 1 718 257 2144 | customerservice@watermark-designs.com