KALLISTA®

Central Park West™
Bathroom Sink Faucet Low Spout

P21210

FEATURES

- *Two-handle, widespread sink faucet for 8" (203 mm) - 16" (406 mm) centers*
- *Brass construction for durability and reliability*
- *Includes Soft Touch drain*
- *1.2 gal/min (4.5 l/min) maximum flow rate*
- *5-5/16" (135 mm) spout reach*
- *Quarter-turn washerless ceramic disc valves*
- *Unlacquered Brass (ULB): available only in North America and United Kingdom*
- *Complements the Central Park West collection*

CODES/STANDARDS APPLICABLE

Specified model meets or exceeds the following:

- *ADA**
- *ASME A112.18.1/CSA B125.1*
- *CSA B651**
- *EPA WaterSense®*
- *ICC/ANSI A117.1*
- *NSF 61*
- *OBC**
- *All applicable US Federal and State material regulations*

** Compliant when installed to the specific requirement of this regulation*

ADA | **CSA B651** | **OBC**

WaterSense Meets EPA Criteria
Certified by IAPMO R&T

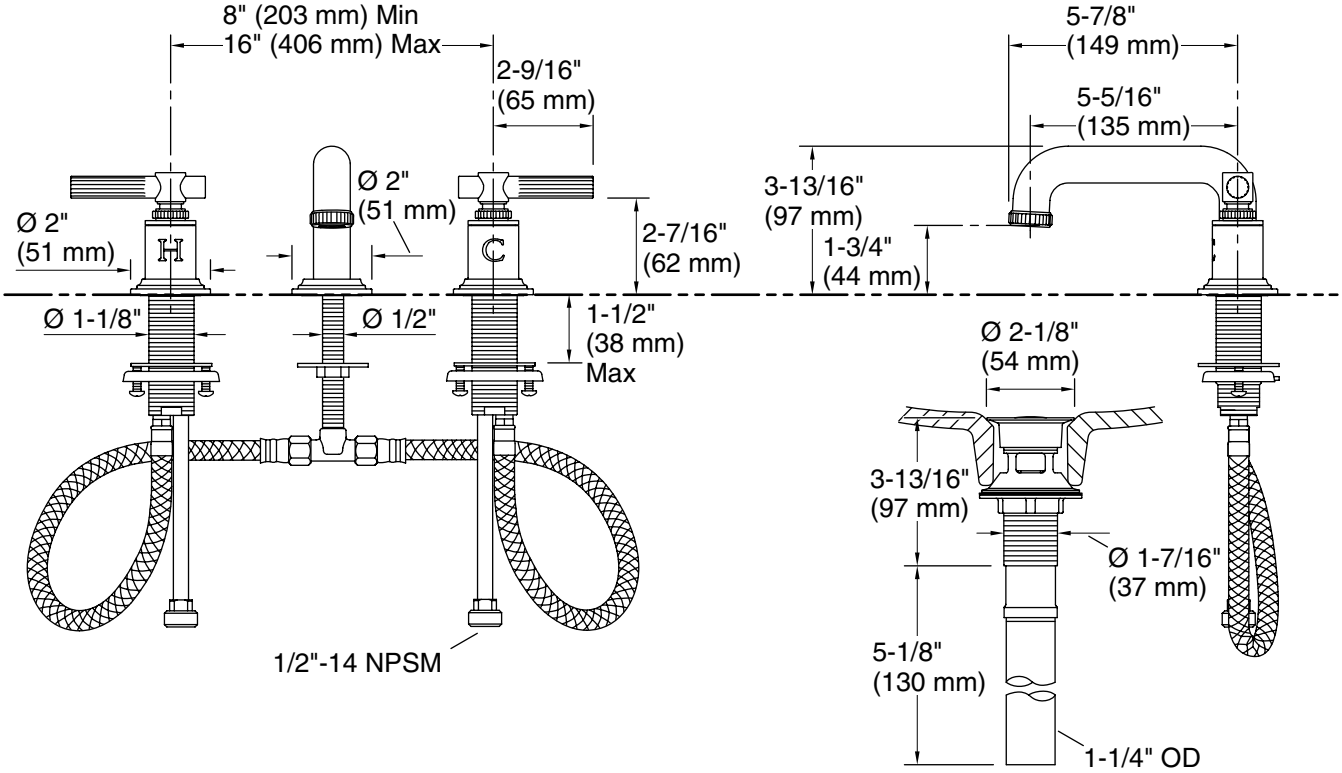

Soft Touch Drain

SPECIFIED MODEL					
Model	Description	Finishes			
P21210-LV	Central Park West Bathroom Sink Faucet, Low Spout, Lever Handles	❑ CP Polished Chrome	❑ SN Polished Nickel	❑ ULB Unlacquered Brass	❑ BV Brushed Bronze

We reserve the right to make revisions without notice in the design of products or in packaging unless this right has specifically been waived at the time the order is accepted.

©2020 KALLISTA

Questions? Problems? For additional assistance, please contact KALLISTA's Customer Service Department at 1-888-4-KALLISTA (1-888-452-5547) or kallista.com.